VT-USB-CELL USB Cellular Dongle



Product Brief

VT-USB-CELL USB cellular dongle integrates the Rockchip RK3308GK quad core ARM Cortex A35 processor clocked at 1.2 GHz, delivering low-power performance and high stability. The unit comes with built-in 64MB DDR2 RAM and 32MB SPI flash. This ensures smooth system operation and reliable persistent storage for firmware and configuration data.

It integrates an LTE Cat-4/Cat-1 cellular module supporting LTE-FDD, covering prevalent frequency bands with broad compatibility. It delivers downlink throughput of 10 Mbps (LTE Cat-1) and 150 Mbps (LTE Cat-4), alongside uplink throughput of 5 Mbps (LTE Cat-1) and 50 Mbps (LTE Cat-4), satisfying requirements for efficient network connectivity. Two dedicated 4G LTE antenna connectors are fitted to boost signal reception, extend network coverage, and strengthen link stability.

A single USB Type-B port enables easy connection to the host device for fast network bring-up and system debugging. An on-board Micro SIM card slot is provided for 4G service activation. Compact in form factor, the device combines industrial-grade robustness and portability, suited for use cases including industrial control and outdoor networking deployments.

Layout and Features

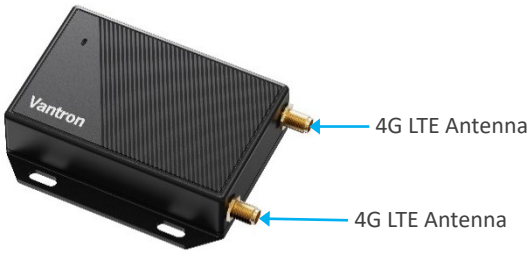

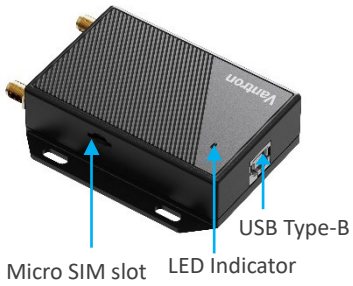

- Rockchip RK3308GK quad-core processor
- 64MB DDR2 + 32MB SPI flash
- Low power consumption and high stability
- 4G LTE Cat-1/Cat-4 supported
- USB Type-B, Micro SIM slot, antenna connector
- CDC-ACM USB port; managed via AT commands

VT-USB-CELL USB Dongle Datasheet

VT-USB-CELL		
System	CPU	Rockchip RK3308GK, quad-core ARM cortex-A35, up to 1.2GHz
	Memory	64MB DDR2
		32MB SPI Flash
Communication	Max. data rate	LTE Cat-1, 10 Mbps (Downlink) & 5 Mbps (Uplink)
		LTE Cat-4, 150 Mbps (Downlink) & 50 Mbps (Uplink)
	Frequency Band	LTE-FDD (Cat-1): B2/4/5/12/13/66
		LTE-FDD (Cat-4): B2/4/5/12/13/25/26
		WCDMA (Cat-4): B2/4/5
I/O	USB	1 × USB 2.0 Type-B
	Antenna	2 × 4G/LTE antenna
	SIM	1 × Micro SIM card slot
System Control	LED Indicator	1 × Power indicator
Power	Input	5V (±5%) DC
	Consumption	~3.5W
Mechanical	Dimensions	78.5mm × 67.5mm × 22mm (not including antenna connectors)
	Enclosure	Plastic
Environmental Condition	Temperature	Operating: 0°C ~ +70°C
	Compliance	FCC, CE, PTCRB
	Carrier Certification	Verizon

Mechanical Outline

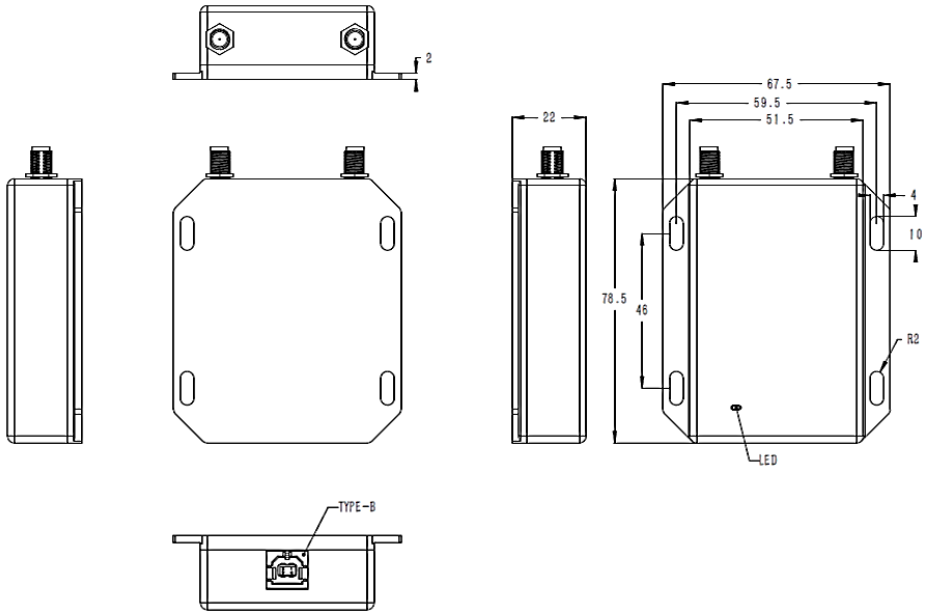

Ordering Information

Ordering No.	LTE Category	I/O
VT-Dongle-LTE1T	Cat 1	USB 2.0 Type-B, Micro SIM slot, antenna connectors
VT-Dongle-LTE4Q	Cat 4	USB 2.0 Type-B, Micro SIM slot, antenna connectors

Packing List	
VT-USB-CELL USB Dongle	1

Optional Accessories	
4G LTE antenna	2
USB Type-A-to-B cable	1

VT-USB-CELL V1.6 © 2026 Vantron Technology, Inc. All rights reserved. This document is subject to change without prior notice.