Table of Contents

1. Overview 1
1.1 Product Brief 1
1.2 Features 1
1.3 Block Diagram 2
1.4 Mechnical Outline 2
1.5 Application 2
1.6 Specifications 3
1.7 Recommended PCB Footprint 4
1.8 Pinout 4
2. System Design 8
2.1 Power Management 8
2.2 Interfaces 8
3. Electrical Characteristics 9
3.1 Absolute Maximum Ratings 9
3.2 Recommended Operating Conditions 9
3.3 Current Consumption 10
3.4 RF Specifications 11
4. Ordering Information 12

VT-SOM-AH-8108 Wi-Fi HaLow Module



1. Overview

1.1 Product Brief

The VT-SOM-AH-8108 is a fully integrated Wi-Fi HaLow module built around the Morse Micro MM8108 SoC—a single-chip solution fully compliant with the IEEE 802.11ah standard. The module also incorporates an ARM Cortex-M33 ultra-low-power MCU that offers a variety of functions including SPI, UART, USB, ADC, and GPIO. This smart module is designed to be readily integrated into any embedded device to provide a simplified Wi-Fi HaLow connection solution for customers looking to easily upgrade their prior RF technology to a Wi-Fi HaLow connection while using the latest WPA3 security protocol.

Operating in the 850~950MHz band with configurable channel widths of 1, 2, 4, and 8MHz, the VT-SOM-AH-8108 achieves single-stream date rates of up to 43.3Mbps at 8MHz bandwidth at extended coverage. It supports the Station (STA) role in its MAC layer, making it ideal for connecting low-power NFC tags, sensors, and access control systems.

With multi-protocol stack support and versatile I/O options, the VT-SOM-AH-8108 speeds up the development of customized Wi-Fi HaLow IoT solutions across a wide range of applications, especially in smart home appliances, industrial IoT devices, smart retail devices, gym instruments, etc.

1.2 Features

- Single-stream data rate up to 43.3Mbps @8MHz
- Support worldwide Sub-1 GHz frequency bands

  Frequency range: 850MHz~950 MHz

  Channel bandwidth options: 1/2/4/8MHz
- Compatible with external LNA, PA
- Automatic frequency & gain control
- Packet detection & channel equalization
- BPSK, QPSK, 16-QAM, 64-QAM, 256-QAM modulation
- Modulation and Coding Scheme (MCS) levels 0~10
- ARM Cortex-M33 MCU & Morse Micro MM8108 SoC
- Packaging: LGA
- 3.0-3.6V single supply for integrated DC-DCs and LDOs
- Compact size, self-contained functions
- Easy integration to any embedded device
- SPI, USB, UART, GPIO for flexible expansion
- Ultra-low-power, reduced cost & time-to-market

1.3 Block Diagram

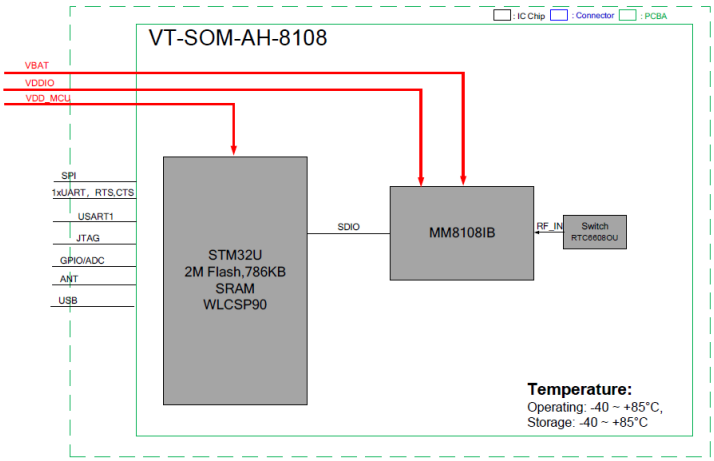

1.4 Mechanical Outline

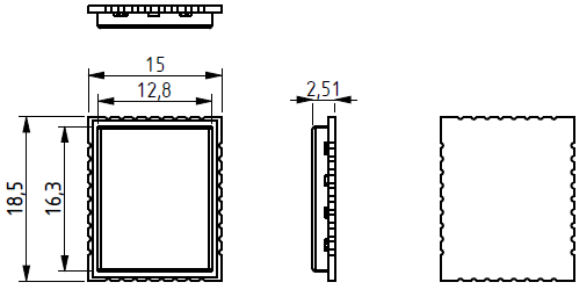

1.5 Application

- Home Automation
  - Alarm system, security cameras, smart doorbells
  - Entertainment (media streaming adapters, speakers)
  - Baby monitors
  - Garage door openers
  - Door locks
  - Smart appliances
  - Energy management
  - Voice control frontends
  - Consumer robotics
- Portables & Wearables
  - Smart watches
  - Smart glasses
  - Kids trackers
  - Fitness bands
- Building Automation
  - Building access control & security
  - HVAC & air quality control
  - Smart city network
  - Commercial robotics
  - EV battery charger telemetry
  - Vehicle firmware OTA update
- Retail & Logistics
  - Digital signage
  - Kiosks / POS / vending
  - Fleet management
  - Inventory management / scanners
- Industrial Automation
  - Autonomous mobile robotics
  - Material handlers / trackers

1.6 Specifications

VT-SOM-AH-8108					
System	Wi-Fi HaLow chip	Morse Micro MM8108 HaLow SoC			
	MCU	STM32 (786KB SRAM, 2MB flash memory)			
I/O	Pin signals*	1 × SPI (mux. 5 × GPIO)			
		2 × UART (mux. 6 × GPIO)			
		1 × USB 2.0 (mux. 2 × GPIO)			
		3 × ADC (mux. 3 × GPIO)			
		1 × I^2C (mux. 2 × GPIO)			
		1 × Dedicated GPIO			
		1 × RF antenna			
		1 × SWD			
HaLow Features	Wi-Fi standard	IEEE 802. 11ah			
	Frequency range (Sub 1 GHz bands)	850MHz ~ 950MHz			
	Channel bandwidth	1 / 2 / 4 /8MHz			
	Data rate	1MHz	2MHz	4MHz	8MHz
		4.44Mbps (Max.)	8.67Mbps (Max.)	20Mbps (Max.)	43.33Mbps (Max.)
	Operating mode	Station			
	Security	AES encryption engine			
		SHA1 and SHA2 hash functions (SHA-256, SHA-384, SHA-512)			
		WPA3 including protected management frames (PMF)			
Software	Working mode	Standalone Mode (User application runs on the STM32 MCU inside the VT-SOM-AH-8108-M2)			
		Standalone Mode with AT command (External controller sends AT commands to the VT-SOM-AH-8108-M2)			
	SDK	Vantron IoT SDK			
Mechanical	Dimensions	18.5mm x 15mm x 2.51mm			
	Packaging	LGA			
	Voltage	VCC: 3.3V	VDDIO: 3.3V	VBAT: 3.3V	
	Temperature	Operating: -40℃ ~ +85℃	Storage: -40℃ ~ +85℃		
	Humidity	Less than 85% RH (non-condensing)			
Compliance	Certification	FCC, CE, UL			

*** Alternate functions of the pins are detailed in Section 1.8 Pinout.**

1.7 Recommended PCB Footprint

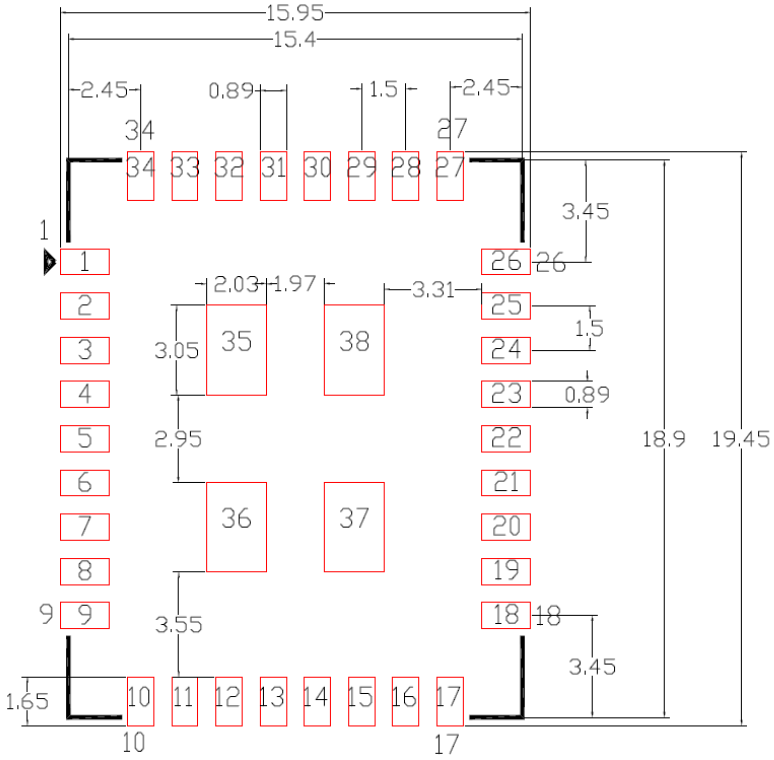

Top View

1.8 Pinout

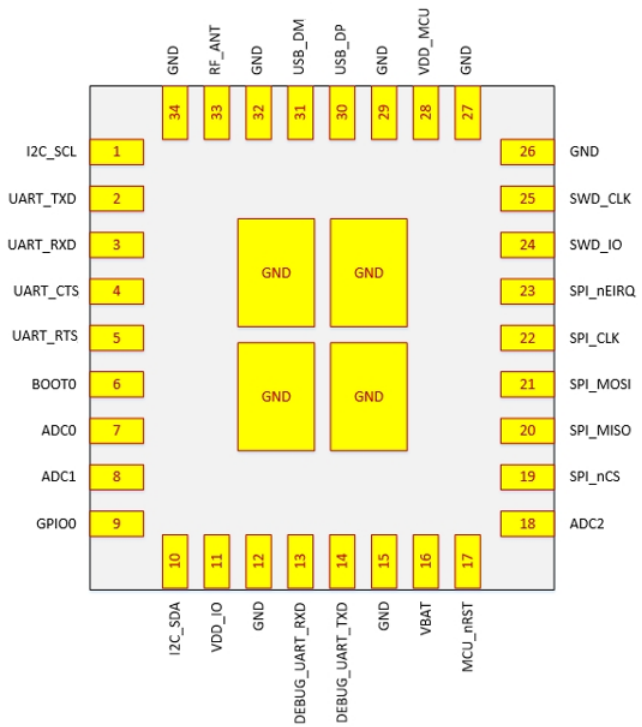

Pin	MCU Pin Name	Primary Function*	Description	Type	Alternate Functions*	Additional Functions*
1	PB8	I2C_SCL	I2C serial clock	I/O	TIM4_CH3, SAI1_CK1, I2C1_SCL, MDF1_CCK0, SPI3_RDY, SDMMC1_CKIN, FDCAN1_RX(boot), DCMI_D6/PSSI_D6, SDMMC2_D4, SDMMC1_D4, SAI1_MCLK_A, TIM16_CH1, EVENTOUT	WKUP5
2	PA7	UART_TXD	UART transmit data	I/O	SRDSTOP, TIM1_CH1N, TIM3_CH2, TIM8_CH1N, I2C3_SCL, SPI1_MOSI (boot), USART3_TX, OCTOSPIM_P1_IO2, LPTIM2_CH2, TIM17_CH1, EVENTOUT	OPAMP2_VINM, ADC1_IN12, ADC4_IN20, WKUP8
3	PA5	UART_RXD	UART receive data	I/O	CSLEEP, TIM2_CH1, TIM2_ETR, TIM8_CH1N, PSSI_D14, SPI1_SCK (boot), USART3_RX, LPTIM2_ETR, EVENTOUT	ADC1_IN10, ADC4_IN10, DAC1_ OUT2, WKUP6
4	PA6	UART_CTS	UART clear to send	I/O	CDSTOP, TIM1_BKIN, TIM3_CH1, TIM8_BKIN, DCMI_PIXCLK/ PSSI_PDCK, SPI1_MISO(boot), USART3_CTS, LPUART1_CTS, OCTOSPIM_P1_IO3, LPGPIO1_P2, TIM16_CH1, EVENTOUT	OPAMP2_ VINP, ADC1_IN11, ADC4_IN11, WKUP7
5	PB1	UART_RTS	UART request to send	I/O	TIM1_CH3N, TIM3_CH4, TIM8_CH3N, LPTIM3_CH2, MDF1_SDI0, USART3_RTS/USART3_DE, LPUART1_RTS/LPUART1_DE, OCTOSPIM_P1_IO0, LPGPIO1_P3, LPTIM2_IN1, EVENTOUT	COMP1_ INM1, ADC1_IN16, ADC4_IN19, WKUP4
6	PH3	Boot0	MCU boot	I		
7	PC2	ADC0	Analog to digital converter in	I/O	LPTIM1_IN2, SPI2_MISO, MDF1_CCK1, OCTOSPIM_P1_IO5, LPGPIO1_P5, EVENTOUT	ADC1_IN3, ADC4_IN3
8	PC0	ADC1	Analog to digital converter in	I/O	LPTIM1_IN1, OCTOSPIM_P1_IO7, I2C3_SCL(boot), SPI2_RDY, MDF1_SDI4, LPUART1_RX, SDMMC1_D5, SAI2_FS_A, LPTIM2_IN1, EVENTOUT	ADC1_IN1, ADC4_IN1
9	PB0	GPIO0	General-purpose I/O	I/O	TIM1_CH2N, TIM3_CH3, TIM8_CH2N, LPTIM3_CH1, SPI1_NSS, USART3_CK, OCTOSPIM_P1_IO1, COMP1_OUT, AUDIOCLK, EVENTOUT	OPAMP2_VOUT, ADC1_IN15, ADC4_IN18

Pin	MCU Pin Name	Primary Function	Description	Type	Alternate Functions	Additional Functions
10	PB9	I2C_SDA	I2C serial data	I/O	IR_OUT, TIM4_CH4, SAI1_D2, I2C1_SDA, SPI2_NSS, SDMMC1_CDIR, FDCAN1_TX(boot), DCMI_D7/PSSI_D7, SDMMC2_D5, SDMMC1_D5, SAI1_FS_A, TIM17_CH1, EVENTOUT	
11		VDD_IO	3.3V IO Power	P		
12		GND	Ground	P		
13	PA10	Debug_UART_RXD	Debug UART receive data	I/O	CRS_SYNC, TIM1_CH3, LPTIM2_IN2, SAI1_D1, DCMI_D1/PSSI_D1, USART1_RX(boot), OTG_FS_ID, SAI1_SD_A, TIM17_BKIN, EVENTOUT	
14	PA9	Debug_UART_TXD	Debug UART transmit data	I/O	TIM1_CH2, SPI2_SCK, DCMI_D0/ PSSI_D0, USART1_TX(boot), SAI1_FS_A, TIM15_BKIN, EVENTOUT	OTG_FS_VBUS
15		GND	Ground	P		
16		VBAT	3.3V VBAT	P		
17	NRST	MCU_nRST	STM32 reset	I		
18	PA2	ADC2	Analog to digital converter in	I/O	TIM2_CH3, TIM5_CH3, SPI1_RDY, USART2_TX(boot), LPUART1_TX, OCTOSPIM_P1_NCS, UCPD1_FRSTX1, TIM15_CH1, EVENTOUT	COMP1_ INP3, ADC1_IN7, WKUP4/ LSCO
19	PG12	SPI_nCS	SPI chip select	I/O	LPTIM1_ETR, OCTOSPIM_P2_NCS, SPI3_NSS(boot), USART1_RTS/ USART1_DE, FMC_NE4, SAI2_SD_A, EVENTOUT	
20	PG10	SPI_MISO	SPI master in slave out	I/O	LPTIM1_IN1, OCTOSPIM_P2_IO7, SPI3_MISO(boot), USART1_RX, FMC_NE3, SAI2_FS_A, TIM15_CH1, EVENTOUT	
21	PB5	SPI_MOSI	SPI master out slave in	I/O	LPTIM1_IN1, TIM3_CH2, OCTOSPIM_P1_NCLK, I2C1_SMBA, SPI1_MOSI, SPI3_MOSI (boot), USART1_CK, UART5_CTS, TSC_G2_IO2, DCMI_D10/PSSI_D10, COMP2_OUT, SAI1_SD_B, TIM16_BKIN, EVENTOUT	UCPD1_DBCC1, WKUP6

Pin	MCU Pin Name	Primary Function	Description	Type	Alternate Functions	Additional Functions
22	PG9	SPI_CLK	SPI clock output	I/O	OCTOSPIM_P2_IO6, SPI3_SCK (boot), USART1_TX, FMC_NCE/FMC_NE2, SAI2_SCK_A, TIM15_CH1N, EVENTOUT	
23	PG11	SPI_nEIRQ	SPI interrupt	I/O	LPTIM1_IN2, OCTOSPIM_P1_IO5, SPI3_MOSI, USART1_CTS, SAI2_MCLK_A, TIM15_CH2, EVENTOUT	
24	PA13	SWD_IO	SWD data	I/O	JTMS/SWDIO, IR_OUT, OTG_FS_NOE, SAI1_SD_B, EVENTOUT	
25	PA14	SWD_CLK	SWD clock	I/O	JTCK/SWCLK, LPTIM1_CH1, I2C1_SMBA, I2C4_SMBA, OTG_FS_SOF, SAI1_FS_B, EVENTOUT	
26		GND	Ground	P		
27		GND	Ground	P		
28		VDD_MCU	3.3V MCU Power	P		
29		GND	Ground	P		
30	PA12	USB_DP	USB differential data plus	I/O	TIM1_ETR, SPI1_MOSI, OCTOSPIM_P2_NCS, USART1_RTS/USART1_DE, FDCAN1_TX, EVENTOUT	OTG_FS_DP (boot)
31	PA11	USB_DM	USB differential data minus	I/O	TIM1_CH4, TIM1_BKIN2, SPI1_MISO, USART1_CTS, FDCAN1_RX, EVENTOUT	OTG_FS_DM (boot)
32		GND	Ground	Power		
33		RF_ANT	RF antenna	A		
34~38		GND	Ground	Power		

Note:

1. Primary function: The active function after pin reset, which is derived from either alternate functions or additional functions.
2. Alternate functions: Functions selected through **GPIOx_AFR** registers.
3. Additional functions: Functions directly selected/enabled through peripheral registers.
4. The SPI (5 pins), two UARTs (4 + 2 pins), USB (2 pins), ADCs (3 pins), and I^2C (2 pins), along with one dedicated GPIO, offer a maximum of 19 GPIOs.

2. System Design

2.1 Power Management

VT-SOM-AH-8108 does not have a power jack, and it is powered by 3.0V ~ 3.6V supply derived from an external power source via pins VDDIO, VBAT, and VDD_MCU.

2.2 Interfaces

VT-SOM-AH-8108 offers multiple interfaces for connecting peripherals/host devices to give full play to its functions. User can use UART to connect the module to a host computer to debug the module.

■ SPI Bus Timing

The SPI interface supports a clock rate up to 80MHz for 80Mbps.

Figure 76. SPI timing diagram - slave mode and CPHA = 0

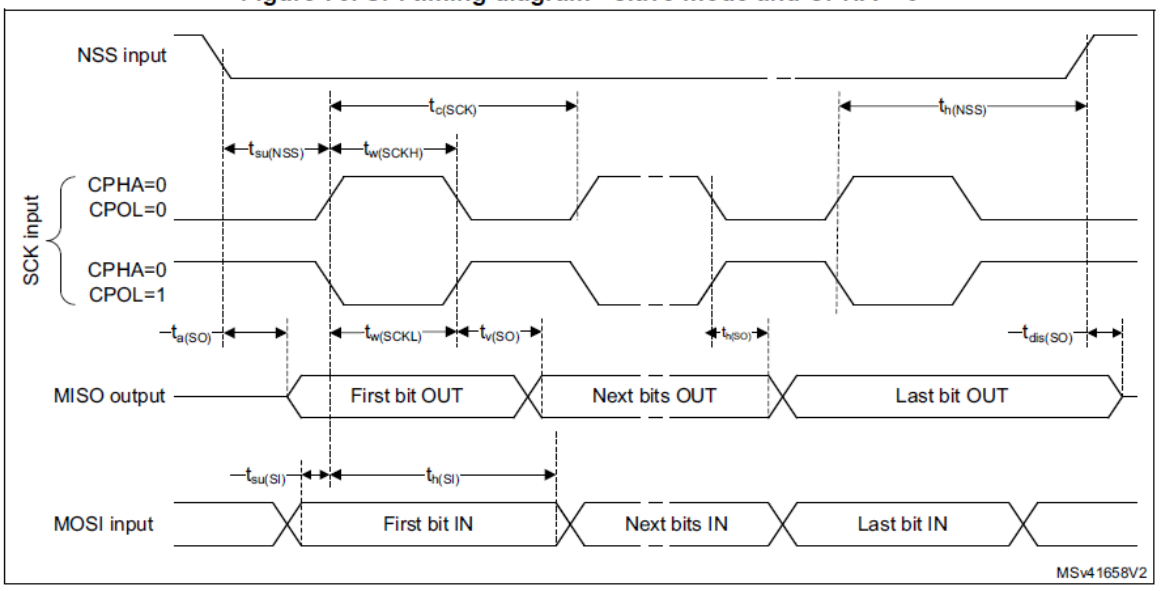

Figure 77. SPI timing diagram - slave mode and CPHA = 1

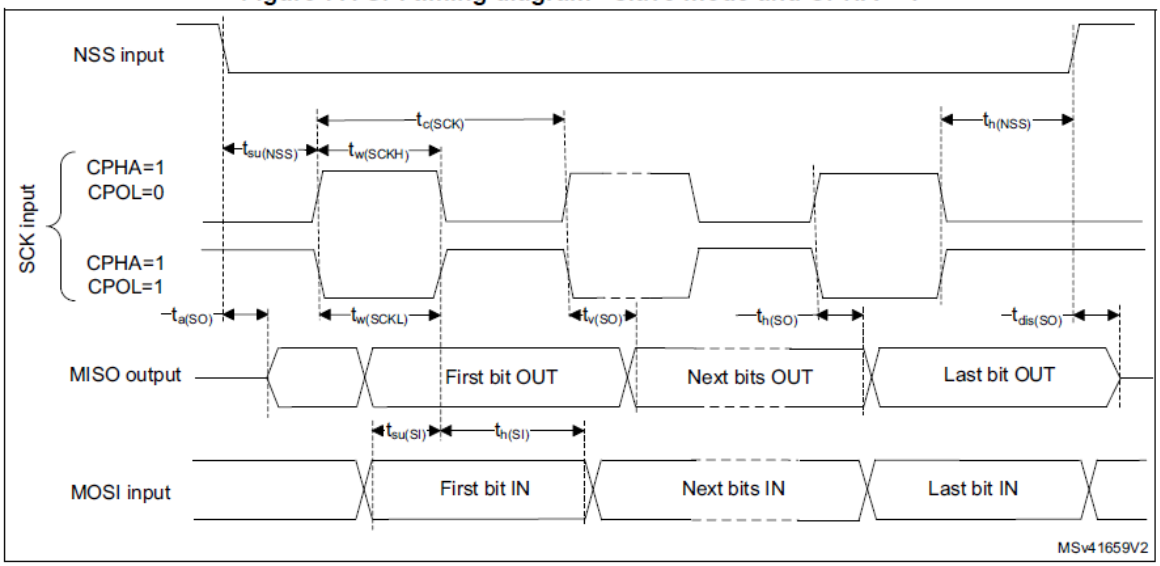

3. Electrical Characteristics

3.1 Absolute Maximum Ratings

Stress beyond absolute maximum ratings may cause permanent damage to the module. Functional operation is guaranteed for recommended operation conditions only. Operation of the device outside of recommended conditions may result in reduced lifetime and/or reliability problems even if the absolute maximum ratings are not exceeded.

Parameter	Min.	Max.	Unit
VBAT	-0.3	3.6	V
RESET_N/WAKE_UP	-0.3	3.6	V
Digital I/O pin	-0.3	VDDIO + 0.3	V

3.2 Recommended Operating Conditions

Parameter	Min.	Typ.	Max.	Unit
Ambient temperature	-40	-	85	℃
Storage temperature	-40	-	85	℃
VBAT	3.0	3.3	3.6	V
VDDIO	3.0	3.3	3.6	V

3.3 Current Consumption

Transmit current consumption

Mode	V_{BAT}=V_{DDIO}=V_{DD_MCU}=3.3V	V_{BAT} + V_{DDIO} Current	V_{DD_MCU} Current
1/2/4/8MHz channel, 100% duty cycle OFDM	23dBM	200mA	200mA
	21dBM	150mA	
	19dBM	115mA	
	17dBM	95mA	

Receive current consumption

Mode	V_{BAT}=V_{DDIO}=V_{DD_MCU}=3.3V	V_{BAT} + V_{DDIO} Current	V_{DD_MCU} Current
Listen	2MHz channel	19mA	20mA
Active receive	2MHz channel	20mA	

Sleep power consumption

Mode	V_{BAT}=V_{DDIO}=V_{DD_MCU}=3.3V	V_{BAT} Current	V_{DD_MCU} Current
Deep sleep	RTC on, wake on timer or WAKE_UP pin	3μA	5mA

Standby power consumption

Mode	V_{BAT}=V_{DDIO}=V_{DD_MCU}=3.3V	V_{BAT} Current	V_{DD_MCU} Current
DTIM3	2MHz channel, RTC=RTC_XTAL	215μA	20μA

3.4 RF Specifications

Receiver

Sensitivities for 10% packet error rate, 256-byte packets:

MCS index	Modulation scheme	Coding rate	Channel Bandwidth				Minimum receive sensitivity (dBm) per bandwidth			
			1MHz	2MHz	4MHz	8MHz	1MHz	2MHz	4MHz	8MHz
0	BPSK	1/2	333	722	1500	3250	-106	-103	-102	-97
1	QPSK	1/2	667	1444	3000	6500	-105	-102	-99	-94
2	QPSK	3/4	1000	2167	4500	9750	-102	-99	-96	-92
3	16-QAM	1/2	1333	2889	6000	13000	-99	-96	-94	-90
4	16-QAM	3/4	2000	4333	9000	19500	-96	-93	-90	-87
5	64-QAM	2/3	2667	5778	12000	26000	-92	-89	-86	-83
6	64-QAM	3/4	3000	6500	13500	29250	-91	-88	-85	-80
7	64-QAM	5/6	3333	7222	15000	32500	-89	-86	-83	-79
8	256-QAM	3/4	4000	8667	18000	39000	-85	-82	-79	-75
9	256-QAM	5/6	4444	N/A	20000	43333	-83	N/A	-77	-73
10	BPSK	1/2 x 2	167	N/A			-109	N/A		

Transmitter

MCS index	Tx average power at filter output (dBm) per BW T_A = 25℃, VBAT=VDDIO=3.3V, SEM & FCC compliant			
	1MHz	2MHz	4MHz	8MHz
0	23	23	22	20
1	23	23	22	20
2	23	23	22	20
3	23	23	22	20
4	22	23	22	20
5	21	22	22	20
6	20	21	21	20
7	19	20	20	20
8	17	18	18	8
9	15	N/A	17	17
10	23	N/A	N/A	N/A

4. Ordering Information

Ordering No.	SoC	Main I/O	Operating Temp.	Working mode
VT-SOM-AH-8108	Morse Micro MM8108 SoC & STMicroelectronics MCU	GPIO, USART, SPI, SWD, ADC, USB	-40℃ ~ +85℃	Standalone

Packing List	
VT-SOM-AH-8108 system-on-module	1

VT-SOM-AH-8108 V1.9 © 2026 Vantron Technology, Inc. All rights reserved. This document is subject to change without prior notice.